Studio MIDI layout
July 2011

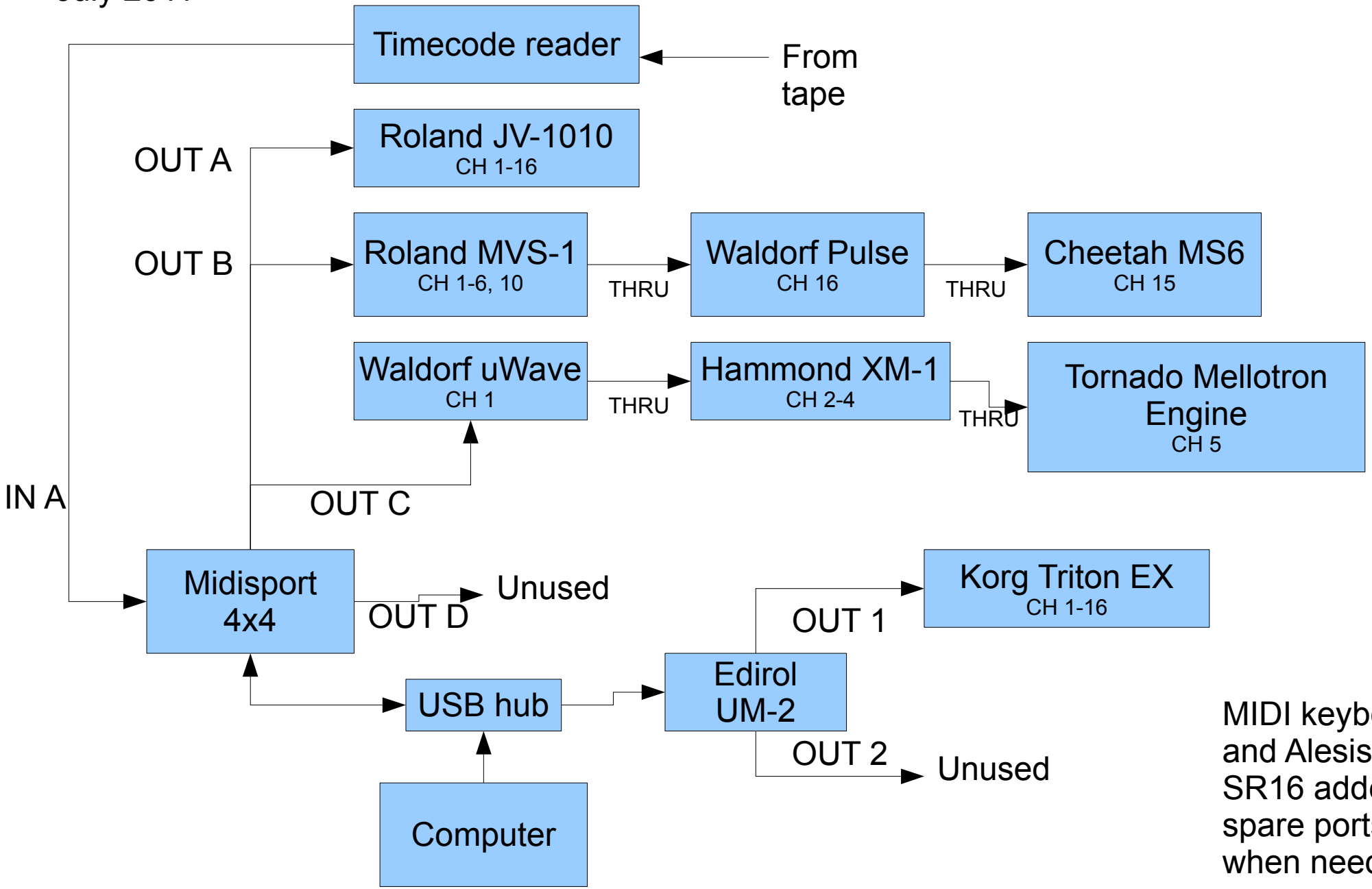

MIDI keyboard and Alesis SR16 added to spare ports when needed
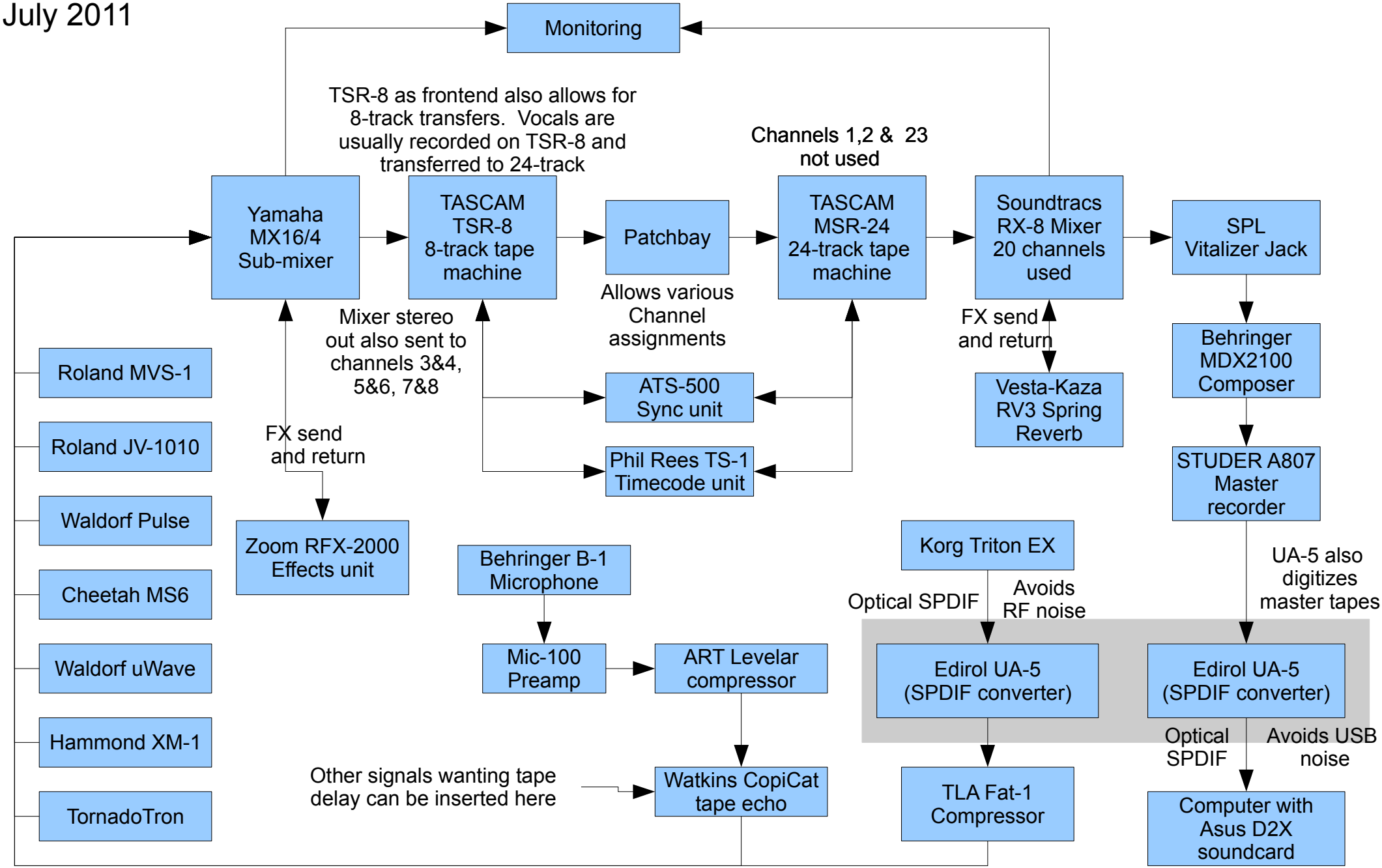
Studio audio layout
July 2011